PRELIMINARY, DDM 8-9-11

REVISIONS				
REV	DESCRIPTION	DATE	EDITED BY	APPV'D

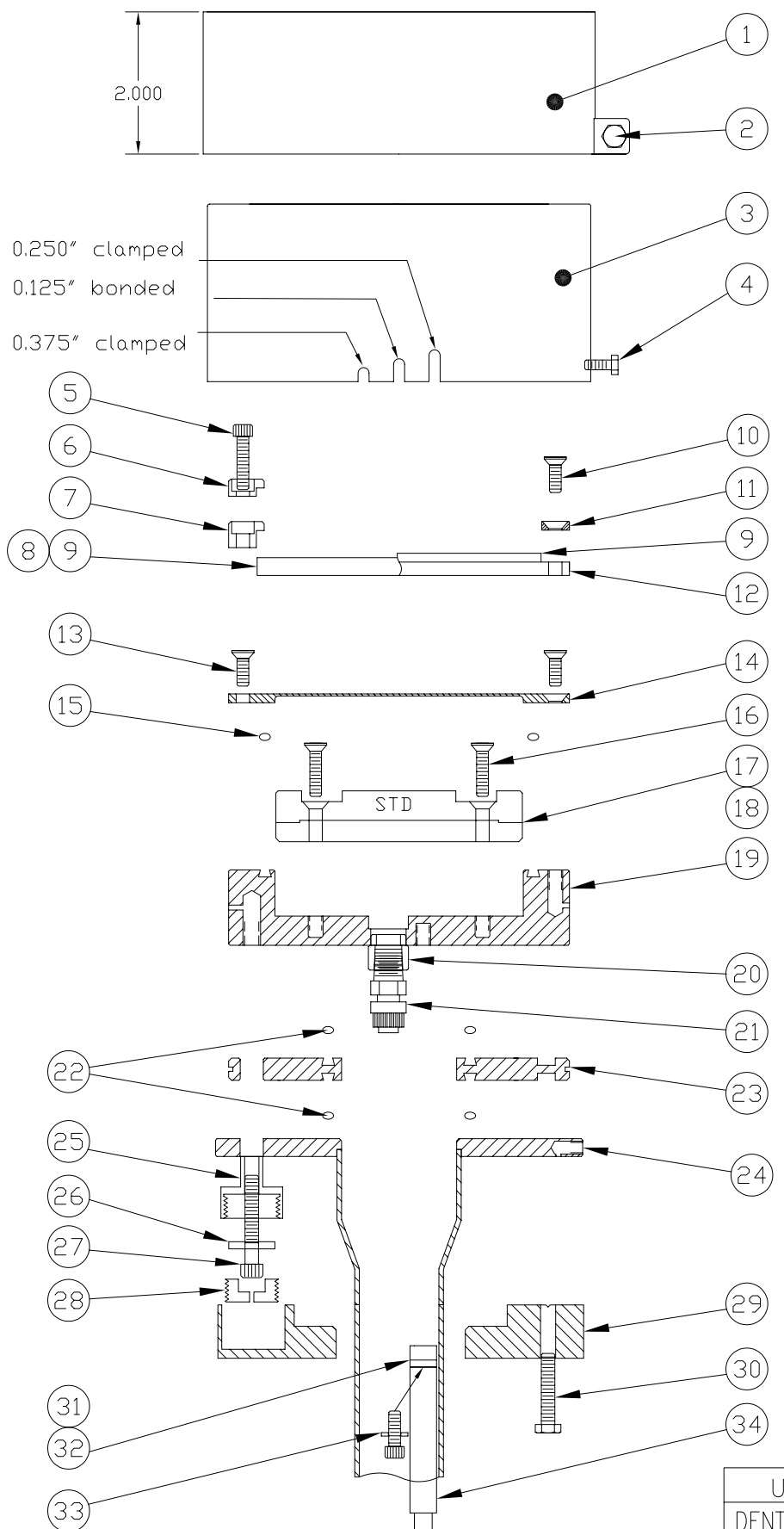

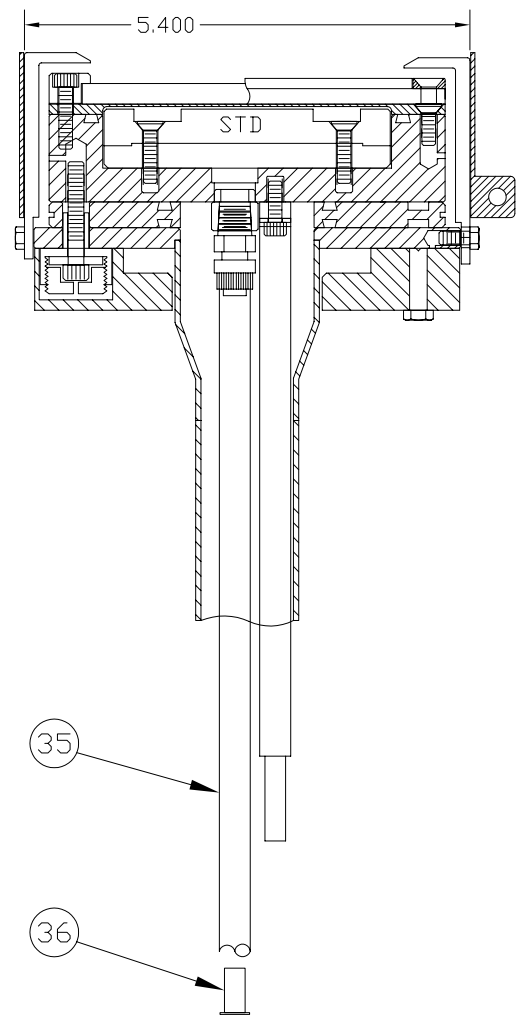

Item	QTY	Part No.	Description	Material
1	1	7047-4R	Cross Contamination Shield	304 SST
2	1	---	Shield Bolt10-32 x1/2", HHMS	SST
3	1	7016	Top Shield for 1/4" & 1/8" targets	304 SST
4	3	---	Top Shield Bolt; 6-32 x3/8", HHMS	SST
5	6	---	Target Clamp Bolt; 8-32 x 3/4", SHCS	SST
6	1	6091-3	Target Clamp, 1/8" Target	304 SST
7	1	6091-1	Target Clamp, 1/4" Target	304 SST
8	1	301-125	Target, Ø2" x 1/8" (Not Supplied)	N/A
9	1	301-250	Target, Ø2" x 1/4" (Not Supplied)	N/A
10	6	---	Backing Plate Bolt; 8-32 x 1/2", PHMS	SST
11	1	7359	Backing Plate Clamp, 1/8" Target	304 SST
12	1	6467-188	Backing Plate, 3/16"	C110
13	6	---	Membrane Bolt; 8-32 x 1/2", PHMS	SST
14	1	6494	Membrane, recessed	C110
15	1	---	Cathode Body O-Ring; #2-238	Viton®
16	2	---	Magnet Bolt; 8-32 x1/2", PHMS	SST
17	1	6468-E	Magnet Cover	C360
18	1	6469	Magnet Plate (Standard)	416 SST
19	1	7017	Cathode Body Base	C110
20	2	3228	Water Tube Braze Fitting, 1/8 FNPT	C360
21	2	---	Water Tube Fitting; 1/8" MNPT x 3/8" CMP (Parker)	C360
22	2	---	Insulator Seal O-Ring; #2-xxx	Viton®
23	1	7018	Insulator Seal	Teflon®
24	1	7019	Flange & FeedTHRU, Ø1.25"	304 SST
25	6	3010	Bolt Insulator, #10	GFT®
26	6	---	Bolt Insulator Bolt; 10-32 x 1 1/4", SHCS	SST
27	6	6578	Bolt Insulator Washer	304 SST
28	6	194	Bolt Insulator cap	Teflon®
29	3	7022	Bolt Insulator Shield	6061-T6
30	3	---	Insulator Shield Bolt; 10-32 x 1" HHMS	SST
31	1	6957	PWR Connector Body	C110
32	1	6961	PWR Rod	C110
33	2	---	PWR Cathode Bolt; 8-32 x 1/2", SHCS, w/ split washer	SST
34	1	6962	PWR Rod Insulator	Teflon®
35	2	---	Cooling Water Tubing, 3/8" OD, x 11 feet	PTFE
36	2	---	Cooling Water Tube Inserts 1/4" OD	C360
37	8	---	AMP Connector Bolt; 4-40 x 3/8", SHCS	SST
38	2	6966	AMP Connector Solder Assy (Conn: 82-92, Strap: 6963)	SST/C110
39	2	015-H230-7-C	HN Dust Cap (Supplied by: Coaxial Components Corp.)	SST
40	1	6965	PWR Enclosure Assy	6061-T6
41	1	6964	PWR Connection Clamp	C110
42	1	---	PWR Bolt & FenderWasher; 10-32 x 7/8", HHMS	SST
43	1	93776A401	PWR Locking Flange Nut; 10-32	SST
44	2	---	Collar Bolt, 1/4-28 x 5/8", SHCS	SST
45	1	6436K143	Collar Clamp	6061-T6
46	1		Collar Attachment Bolt, 10-32 x 7/8", SHCS	
47	2	PLJ3/8	Pisco Elbo Fitting, 3/8"	Plastic
48	2	51055K5	McMaster Bulkhead Fitting, 3/8"	Plastic
49	6	---	Enclosure Cover Bolt; 6-32 x 3/8", Pan Head	SST
50	1	6946	PWR Enclosure Cover	6061-T6

Used On
DENTON VACCUM

CONFIDENTIAL
Not for publication. This drawing is the property of Sierra Applied Sciences, Inc. Its use is conditioned upon the user's agreement not to copy or reproduce the drawing in whole or in part or to use the drawing to reproduce the material desribed therein or any other purpose without written permission from Sierra Applied Sciences, Inc. These parts may be covered by one or more of the following U.S. Patents, #5,262,028; #5,415,754.tel: 303.440.0861 fax: 303.449.3622

UNLESS OTHERWISE SPECIFIED

TOLERANCES

.X= ± 0.1
.XX= ± 0.01
.XXX= ± 0.003
ANGULAR= ± 0.5°

SURFACE ROUGHNESS: 64 ✓

Sierra Applied Sciences, Inc.

MATERIAL:	SCALE: NONE	DRAWN BY: DDM
FINISH:	DATE: 11/18/10	CHECKED BY:
TITLE: Ø4" ROUND INTERNAL, RF		
DRAWING SIZE:	SHEET: 1 OF: 1	DRAWING NUMBER: 7020
		REV: